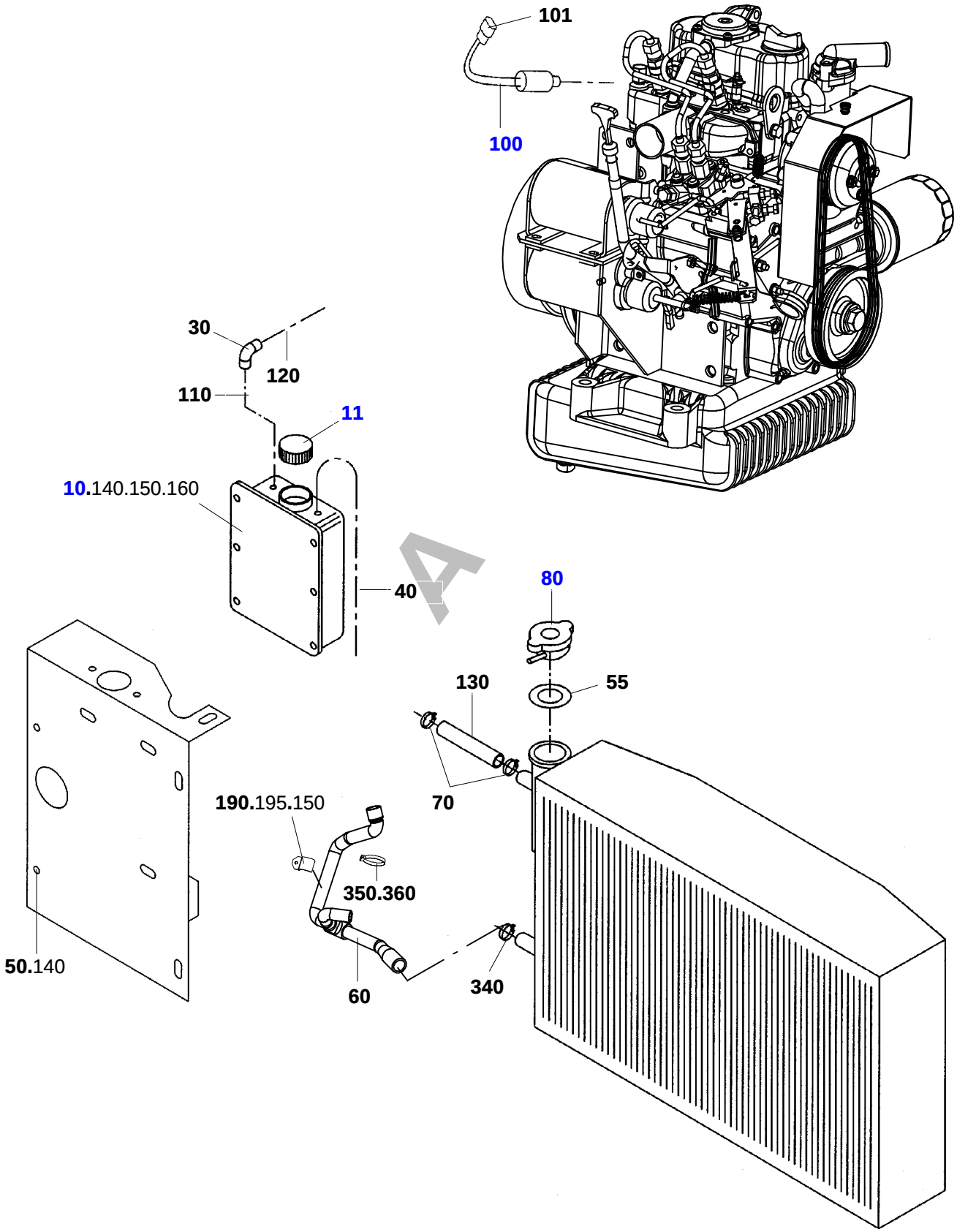
101
100
30
120
110
11
10.140.150.160
40
80
130
55
70
190.195.150
350.360
60
340
50.140